SYSTEM OVERVIEW LAMPO CR EVX

C STAT. D STAT. E STAT.

MAIN FEATURES

- Tool length adjustment using button without disassembly,
- Using NO_SLUG Dies,
- Version with Original Style Punch and Ultra,
- Original Style Punch with the possibility of Air-Blow system (Lubrificated),
- Punch Ultra always Air-Blow,
- Air-Blow Guide with 3 angular references 0 ° -90 ° -225 °,
- Stripper Air-Blow and compatible with Mate and Wilson,
- A station is compatible with MATE punches,
- B station is compatible with MATE and WILSON,
- C - D - E stations using Original Style punches,
- C - D - E stations using guides treated with nickel to ensure greater smoothness, tool life and less usury of the turret,
- The Air-Blow system combined with No-Slug dies eliminates the problem of rising scrap,

LAMPO CR EVX – C / D / E Station

C STAT. D STAT. E STAT.

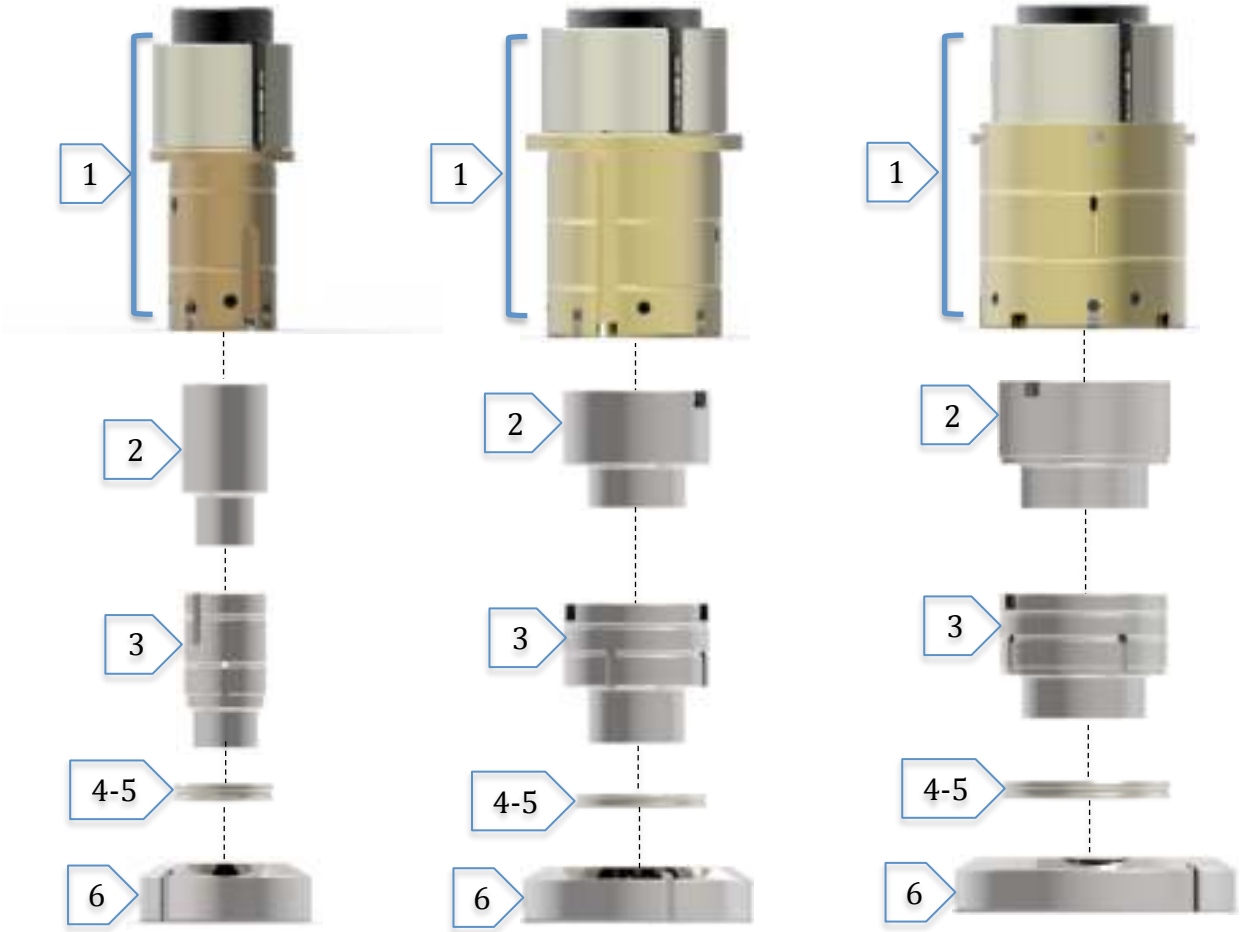

	Stat. C	Stat. D	Stat. E
Extra per ricopertura TiCN TiCN Coating Extra Price			
Extra per profilo rinforzato Strenghtened profile			
Extra cesoiatura C05-C06 Extra for non-standard shearing			
Extra cesoiatura C01-C02-C03-C04 Extra for non-standard shearing			

M 14 STYLE

STAZ. C		STAZ. D		STAZ. E	
Cod.	PRICE	Cod.	PRICE	Cod.	PRICE
PATCX3		PATDX3		PATEX3	
PA_CX3		PA_DX3		PA_EX3	

Per completamento codice vedi pag. 52 - To complete the code, see page 52

Pos.	Descr.		STAZ. C		STAZ. D		STAZ. E	
			Cod.	PRICE	Cod.	PRICE	Cod.	PRICE
1	Portapunzone Lampo CR EVX Punch Holder LAMPO CR EVX		UA0CK4		UA0DK4		UA0EK4	
2	Punzone - STANDARD Punch HSS	Ton.-Rou.	PATCL2		PATDL2		PATEL2	
		Fig.-Sha.	PA_CL2		PA_DL2		PA_EL2	
3	Punzone AIRBLOW - AirBlow Punch HSS Lubrificated	Ton.-Rou.	PATCC3		PATDC3		PATEC3	
		Fig.-Sha.	PA_CC3		PA_DC3		PA_EC3	
4	Estrattore - Stripper	Ton.-Rou.	EATCL4		EATDL4		EATEL4	
		Fig.-Sha.	EA_CL4		EA_DL4		EA_EL4	
5	Estrattore Air Blow - Air Blow Stripper	Ton.-Rou.	EATCR4		EATDR4		EATER4	
		Fig.-Sha.	EA_CR4		EA_DR4		EA_ER4	
6	Matrice HWS - Antisfrido	Ton.-Rou.	MATCL1		MATDL1		MATEL1	
	Die HWS - No Slug	Fig.-Sha.	MA_CL1		MA_DL1		MA_EL1	
	Matrice HSS - Antisfrido	Ton.-Rou.	MATCL2		MATDL2		MATEL2	
	Die HSS - No Slug	Fig.-Sha.	MA_CL2		MA_DL2		MA_EL2	

Ricambi EVX – EVX Spare Parts

C STAT.

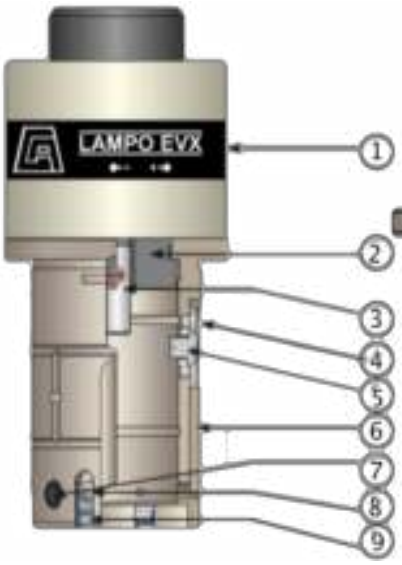

D STAT.

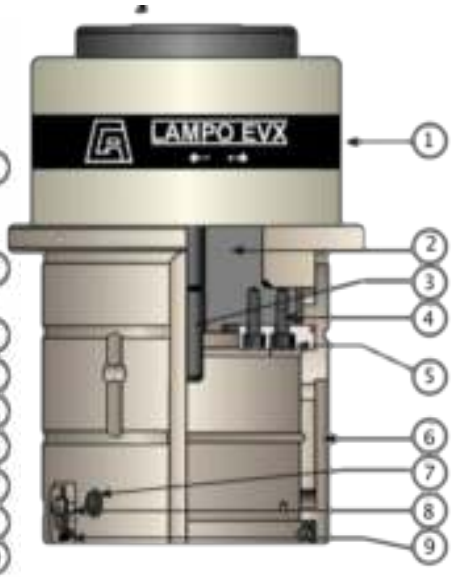

E STAT.

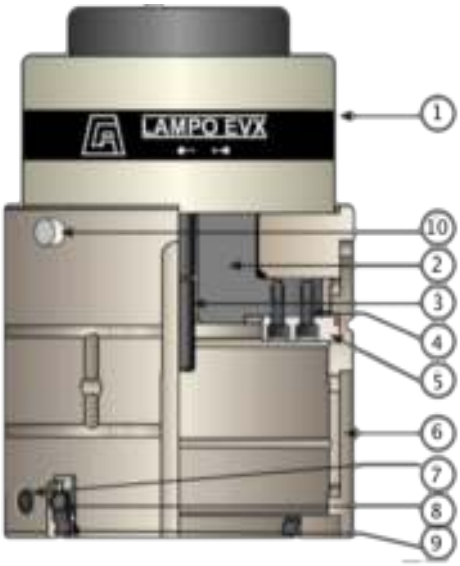

STAZIONE C - C STATION			STAZIONE D - D STATION		STAZIONE E - E STATION	
Descrizione - Description	Codice - Code	Price	Codice - Code	Price	Codice - Code	Price
1. Gruppo Lampo EVX	OAOCA4		OAODA4		OAODA4	
2. Mazza Punzone	9SSILEN052-01		9SSILEN098-01		9SSILEN097-01	
3. Vite Forata M12X70	9SSILEN029		9SSILEN029		9SSILEN029	
4. Vite (kit 10pz.)	9KVTPSM5X8		9KVTCEM5X10		9KVTCEM5X10	
5. Chiavetta	9SAMA00051		AMA00052-01		AMA00052-01	
6. Guida	9SSILEN40-01		9SSILEN44-01		9SSILEN048-01	
7. Grano M8X8 Kit 4 pz	9KGRANOM8X8		9KGRANOM8X8		9KGRANOM8X8	
8. Vite (kit 10 pz.)	9KVTBM4X6		9KVTBM4X6		9KVTBM4X6	
9. Fermo Estrattore	9SAMA00031		9SAMA00031		9SAMA00031	
10. Chiavetta					9TSPINA10X25	

SYSTEM OVERVIEW LAMPO EV

C STAT. D STAT. E STAT.

MAIN FEATURES

- Tool length adjustment using standard instruments,
- Using NO_SLUG Dies,
- Version with Original Style Punch,
- Original Style Punch with the possibility of Air-Blow system,
- Stripper Air-Blow and compatible with Mate and Wilson,
- C - D - E stations using guides treated with nickel to ensure greater smoothness, tool life and less usury of the turret,
- The Air-Blow system combined with No-Slug dies eliminates the problem of rising scrap,

LAMPO EV Air Blow - C / D / E Station

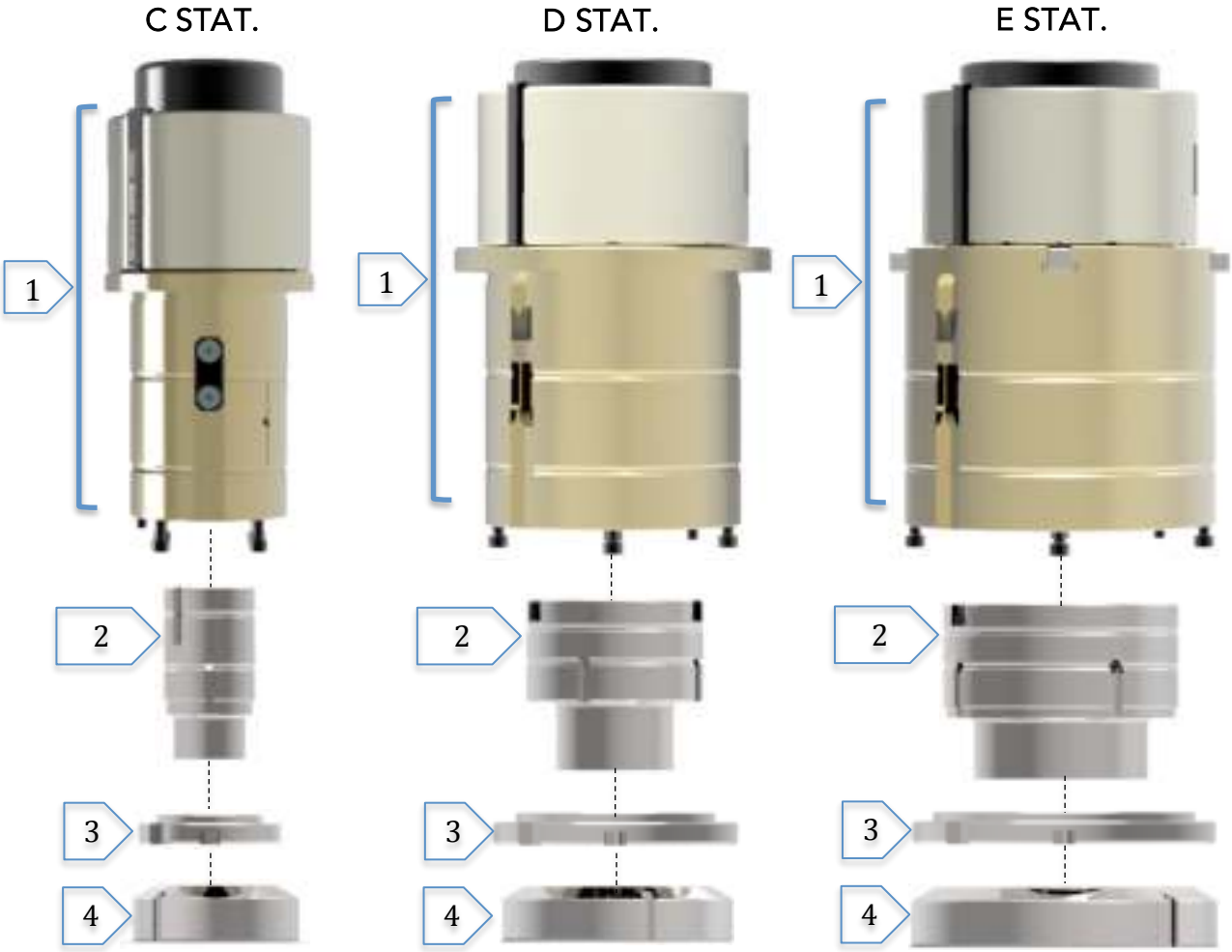

	Stat. C	Stat. D	Stat. E
Extra per ricopertura TiCN TiCN Coating Extra Price			
Extra per profilo rinforzato Strenghtened profile			
Extra cesoiatura C05-C06 Extra for non-standard shearing			
Extra cesoiatura C01-C02-C03-C04 Extra for non-standard shearing			

Per completamento codice vedi pag. 52 - To complete the code, see page 52

Pos.	Descr.		STAZ. C		STAZ. D		STAZ. E	
			Cod.	PRICE	Cod.	PRICE	Cod.	PRICE
1	Portapunzone Lampo EV Punch Holder Lampo EV		UAOCY4		UAODY4		UAOEY4	
2	Punzone AirBlow - AirBlow Punch HSS	Ton.-Rou.	PATCC3		PATDC3		PATEC3	
	Lubrificated	Fig.-Sha.	PA_CC3		PA_DC3		PA_EC3	
3	Estrattore - Air Blow	Ton.-Rou.	EATCC4		EATDC4		EATEC4	
	Stripper - Air Blow	Fig.-Sha.	EA_CC4		EA_DC4		EA_EC4	
4	Matrice HWS - Antisfrido	Ton.-Rou.	MATCL1		MATDL1		MATEL1	
	Die HWS - No Slug	Fig.-Sha.	MA_CL1		MA_DL1		MA_EL1	
	Matrice HSS - Antisfrido	Ton.-Rou.	MATCL2		MATDL2		MATEL2	
	Die HSS - No Slug	Fig.-Sha.	MA_CL2		MA_DL2		MA_EL2	

Ricambi Portapunzone Lampo EV Air Blow
Lampo EV Air Blow Punch Holder Spare Parts

C STAT. D STAT. E STAT.

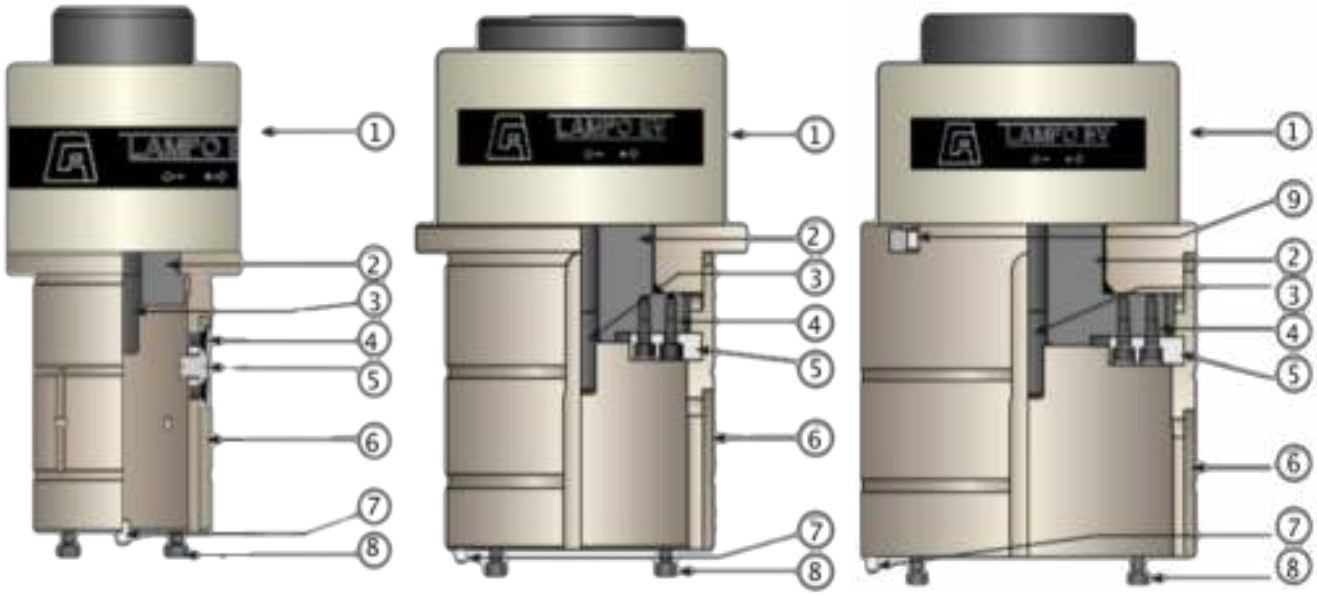

STAZIONE C - C STATION			STAZIONE D - D STATION		STAZIONE E - E STATION	
Descrizione - Description	Codice - Code	Price	Codice - Code	Price	Codice - Code	Price
1. Gruppo Lampo EV	OAOCA4		OAODA4		OAODA4	
2. Mazza Punzone	9SSILEN052		9SSILEN098		9SSILEN097	
3. Vite Forata	9SSILEN029		9SSILEN029		9SSILEN029	
4. Vite (kit. 10 pz.)	9KVTPSM5X8		9KVTCEM5X10		9KVTCEM5X10	
5. Chiavetta	9SAMA00051		AMA00052		AMA00052	
6. Guida	9SSILEN087		9SSILEN046		9SSILEN050	
7. Spina Cilindrica (4 pz)	9KSPINA5X14		9KSPINA5X14		9KSPINA5X14	
8. Vite (kit 5 pz.)	9KVTCEM5X14		9KVTCEM5X14		9KVTCEM5X14	
9. Chiavetta + Vite					9SSILEN065-02+9KVTSM5X14	

SYSTEM OVERVIEW STANDARD

C STAT. D STAT. E STAT.

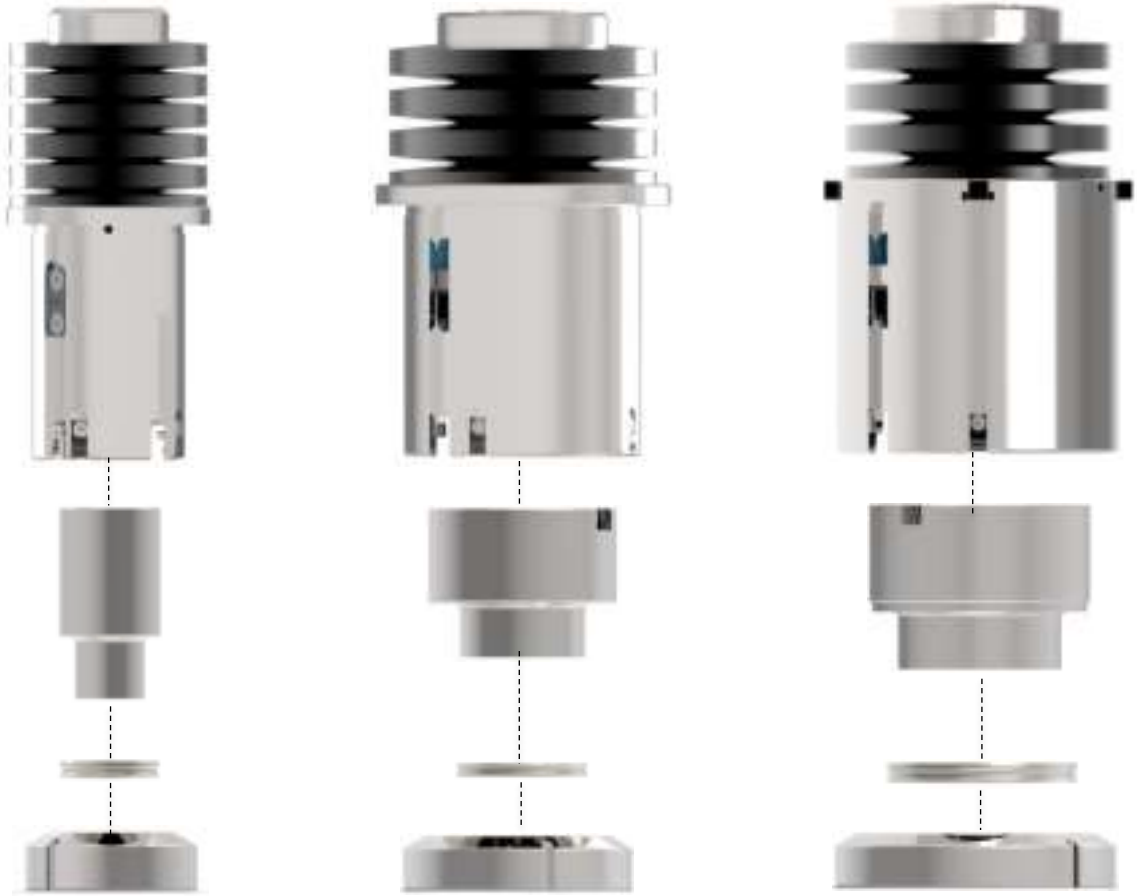

MAIN FEATURES

- Using NO_SLUG Dies with 3 angular references,
- Version Original Style ,
- Original Style Punch with the possibility of Air-Blow system,
- Closed Guide with 3 angular references 0 ° -90 ° -225 ° also in Air Blow system,
- A – B - C - D - E stations using Original Style punches,
- C - D - E stations using guides treated with nickel to ensure greater smoothness, tool life and less usury of the turret,
- The Air-Blow system combined with No-Slug dies eliminates the problem of rising scrap,

STANDARD – C / D / E Station

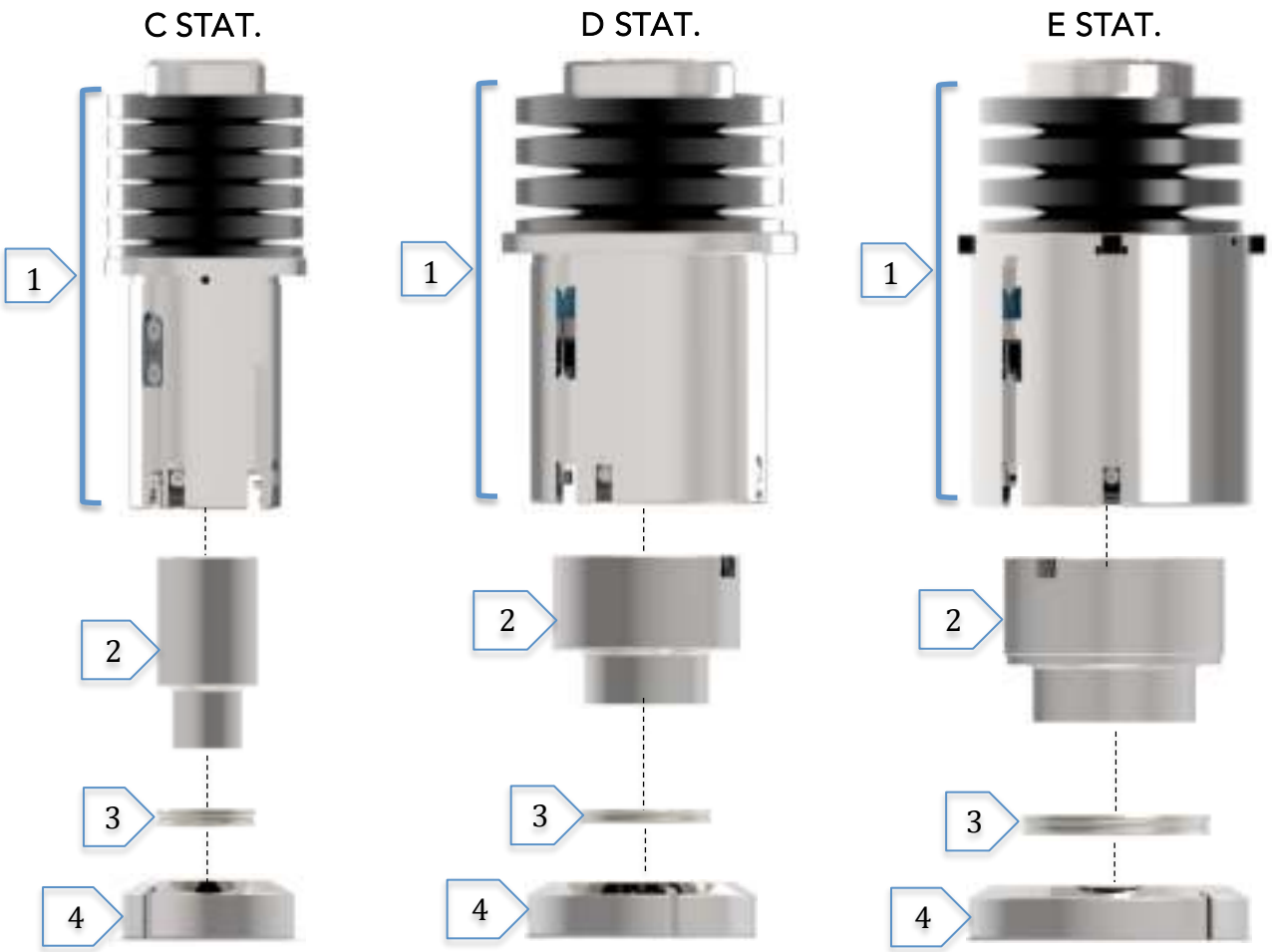

	Stat. C	Stat. D	Stat. E
Extra per ricopertura TiCN TiCN Coating Extra Price			
Extra per profilo rinforzato Strenghtened profile			
Extra cesoiatura C05-C06 Extra for non-standard shearing			
Extra cesoiatura C01-C02-C03-C04 Extra for non-standard shearing			

Per completamento codice vedi pag. 52 - To complete the code, see page 52

Pos.	Descr.		STAZ. C		STAZ. D		STAZ. E	
			Cod.	PRICE	Cod.	PRICE	Cod.	PRICE
1	Portapunzone Punch Assy		UAOCB4		UAODB4		UAOEB4	
2	Punzone - Punch Standard HSS	Ton.-Rou.	PATCL2		PATDL2		PATEL2	
		Fig.-Sha.	PA_CL2		PA_DL2		PA_EL2	
3	Estrattore - Stripper	Ton.-Rou.	EATCL4		EATDL4		EATEL4	
		Fig.-Sha.	EA_CL4		EA_DL4		EA_EL4	
4	Matrice HWS - Antisfrido	Ton.-Rou.	MATCL1		MATDL1		MATEL1	
	Die HWS - No Slug	Fig.-Sha.	MA_CL1		MA_DL1		MA_EL1	
	Matrice HSS - Antisfrido	Ton.-Rou.	MATCL2		MATDL2		MATEL2	
	Die HSS - No Slug	Fig.-Sha.	MA_CL2		MA_DL2		MA_EL2	

Ricambi Portapunzone STANDARD
STANDARD Stripping Spare Parts

C STAT.

D STAT.

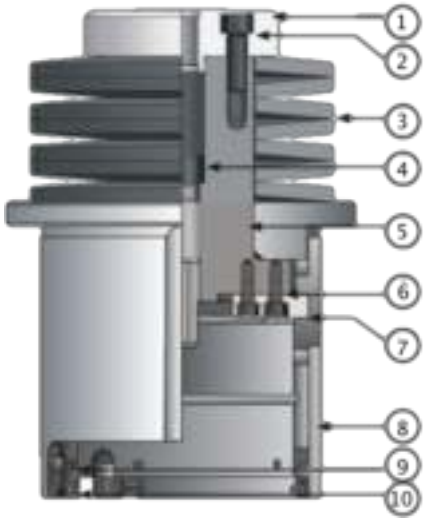

E STAT.

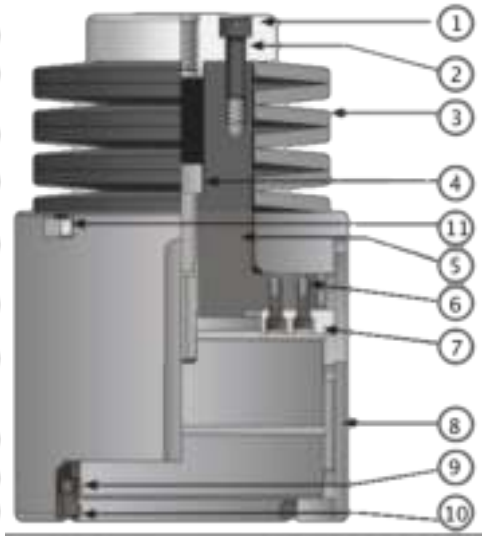

STAZIONE C - C STATION			STAZIONE D - D STATION		STAZIONE E - E STATION	
Descrizione - Description	Codice - Code	Price	Codice - Code	Price	Codice - Code	Price
1. Testa Punzone	9SSILEN075		9SSILEN076		9SSILEN076	
2. Vite KIT	9KVTCEM8X25		9KVTCEM8X25		9KVTCEM8X25	
3. Molla a Tazza	XAOCL4 (n°11)		XAODL4 (n° 7)		XAOEL4 (n°7)	
4. Vite	9KVTCEM12X70		9KVTCEM12X70		9KVTCEM12X70	
5. Mazza Punzone	9SSILEN072		9SSILEN073		9SILEN074	
6. Vite KIT	9KVTPSM5X8		9KVTCEM5X10		9KVTCEM5X10	
7. Chiavetta	9SAMA00051		AMA00052		AMA00052	
8. Guida	9SSILEN001-01		9SSILEN002-01		9SSILEN003-01	
9. Vite KIT	9KVTBM4X6		9KVTBM4X6		9KVTBM4X6	
10. Fermo Estrattore	9SAMA00031		9SAMA00031		9SAMA00031	
11. Chiavetta					9SSILEN065-02+9KVTSM5X14	

LAMPO EV Avv. Pinze – Sheet Saver LAMPO EV

D STAT.

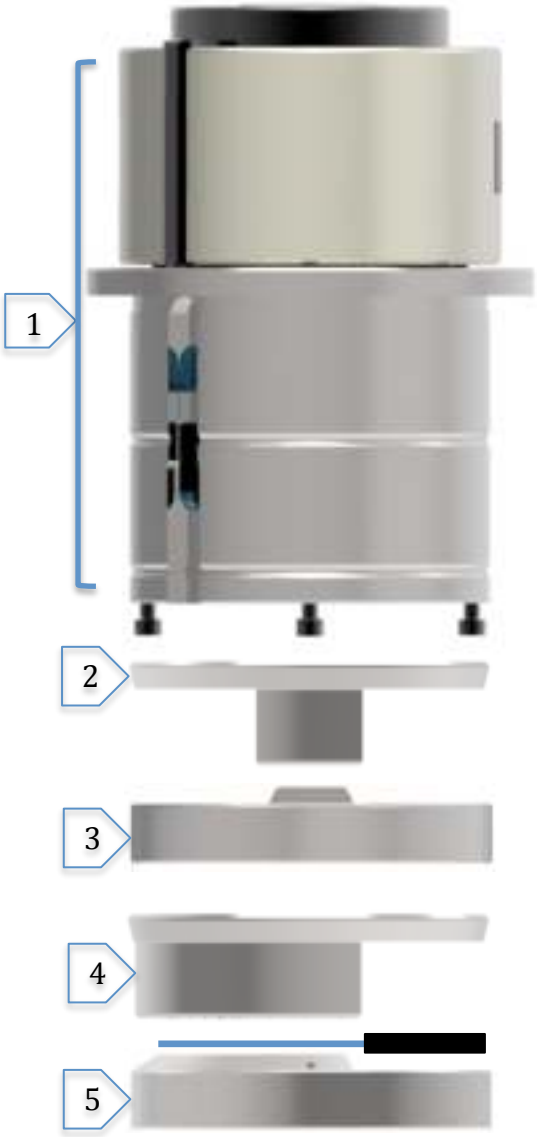

E STAT.

Pos.	Descr.	STAZ. D		STAZ. E	
		Cod.	PRICE	Cod.	PRICE
1	Gruppo LAMPO AVV. PINZE - Guide Assy LAMPO Sheet Saver	OAODW4		OAOEW4	
2	Estrattore Air Blow 2 lati - Sheet Saver Stripper 2 sides	EA_DQ4		EA_EQ4	
3	Matrice HSS 2 lati -2 sides HSS Die	MA_DQ2		MA_EQ2	
4	Estrattore Air Blow 1 lati - Sheet Saver Stripper 1 side	EA_DP4		EA_EP$	
5	Matrice HSS 1 lato -1 side HSS Die	MA_DP2		MA_EP2	

Distanza minima da bordo lamiera a bordo taglio
Minimum distance from the start of cut to the beginning of sheet

Premilamiera e matrice AVV. PINZE

SHEET SAVER Stripper and Die

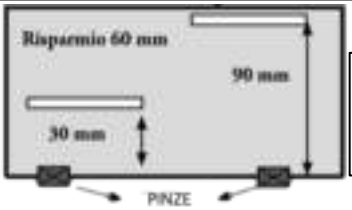

Premilamiera e matrice STANDARD

STANDARD Stripper and Die

Punzoni e Matrici Lama riportata – Inserted Blade Punch & Die

Assieme Punzone STD:
Staz. C : FA_CL4
Staz. D : FA_DL4
Staz. E : FA_EL4
Completo di Viti e spine

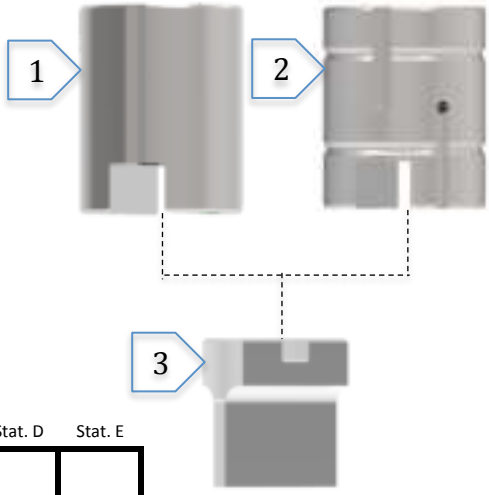

Assieme Punzone AIR BLOW:
Staz. C : FA_CC4
Staz. D : FA_DC4
Staz. E : FA_EC4
Completo di Viti e spine

Assieme Punzone AIR BLOW M14:
Staz. C : FAOCX4
Staz. D : FAODX4
Staz. E : FAOEX4
Completo di Viti e spine

	Stat. C	Stat. D	Stat. E
Extra per ricopertura TiCN TiCN Coating Extra Price			
Extra per profilo rinforzato Strenghtened profile			
Extra cesoiatura C05-C06 Extra for non-standard shearing			
Extra cesoiatura C01-C02-C03-C04 Extra for non-standard shearing			
Extra dimensioni non STANDARD Extra for non standard Dimension			
Microgiunzione Microjoint			

STAZIONE C - C STATION				STAZIONE D - D STATION		STAZIONE E - E STATION	
Pos.	Descrizione - Description	Codice - Code	Price	Codice - Code	Price	Codice - Code	Price
1	Corpo punzone STD - STD Punch Body	CAOCL4		CAODL4		CAOEL4	
2	Corpo Punzone AIR BLOW - A. B. Punch Body	CAOCC4		CAODC4		CAOEC4	
2	Corpo Punz. A. B. M14 - M 14 AIR BLOW Punch Body	CAOCX4		CAODX4		CAOEX4	
3	Lama Punzone - Punch Blad	JA_CL2		JA_DL2		JA_EL2	

STAZIONE C - C STATION				STAZIONE D - D STATION		STAZIONE E - E STATION	
Pos.	Descrizione - Description	Codice - Code	Price	Codice - Code	Price	Codice - Code	Price
1	Corpo Matrice - Die Body	DAOCL4		DAODL4		DAOEL4	
2	Anello - Ring	AMA00072		AMA00095		AMA00102	
3	Lama Matrice - Die Blade	YA_CL2		YA_DL2		YA_EL2	
4	Estrattore Air Blow - Air Blow Stripper	EA_CV4		EA_DV4		EA_EV4	

N.B. Valido solo in caso di uso con portautensile LAMPO EV AIR BLOW Vedi pag. 16
P.N. Valid only with LAMPO EV AIR BLOW Punch Holder. See page 16

Punzone guidato – Fully Guided Punch

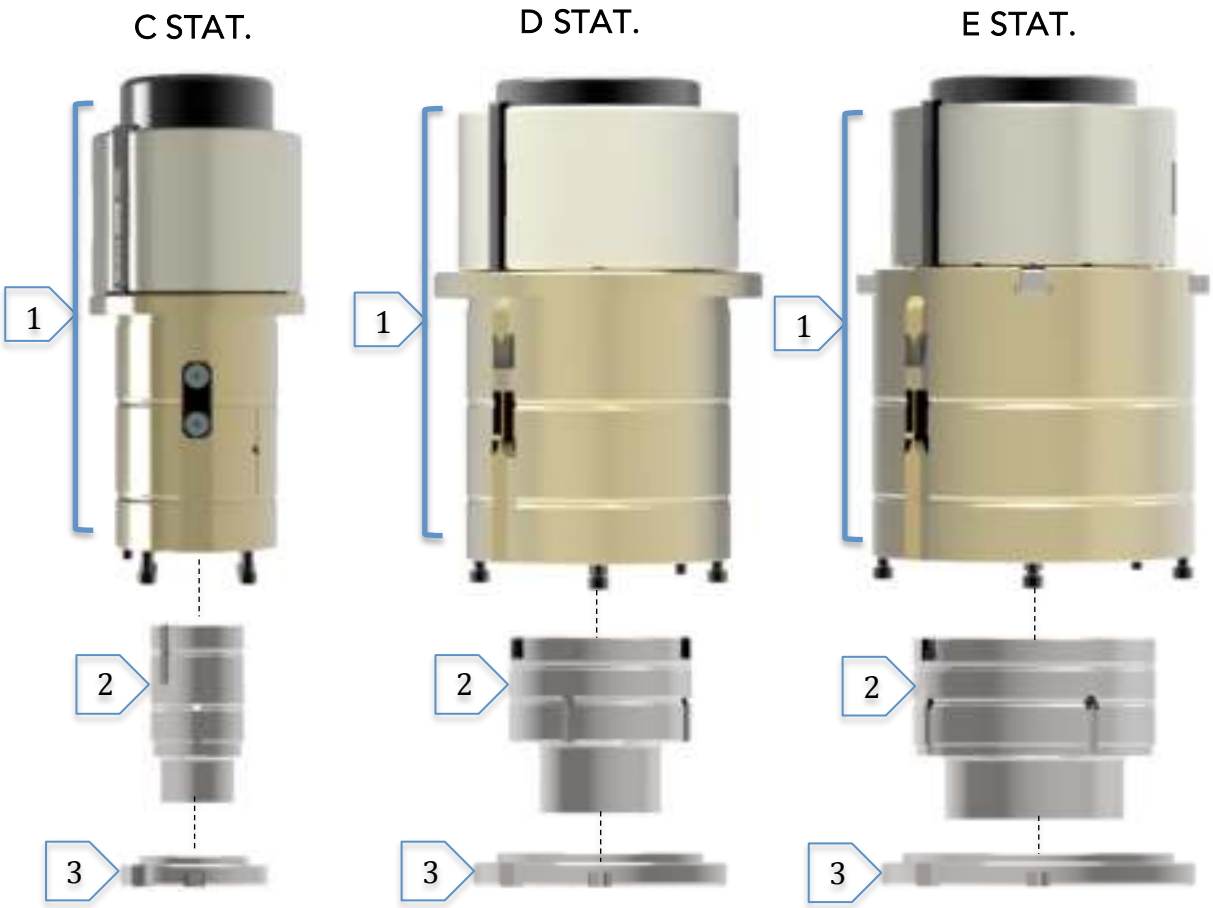

Per completamento codice vedi pag. 52 - To complete the code, see page 52

Pos.	Descr.		STAZ. C		STAZ. D		STAZ. E	
			Cod.	PRICE	Cod.	PRICE	Cod.	PRICE
1	Portapunzone LAMPO Canister LAMPO		UAOCY4		UAODY4		UAOEY4	
2	Punzone AIR Blow - Air Blow Punch Lubrificated	Ton.-Rou.	PATCC3		PATDC3		PATEC3	
		Fig.-Sha.	PA_CC3		PA_DC3		PA_EC3	
3	Estrattore FULLY - FULLY Stripper	Ton.-Rou.	EATCG4		EATDG4		EATEG4	
		Fig.-Sha.	EA_CG4		EA_DG4		EA_EG4	

Gamma completa di utensili con guida maggiorata e tolleranze ristrette per aumentare la precisione in taglio. Vengono adottati tutti gli accorgimenti necessari affinché le tolleranze tra punzone e sistema di guida siano ristrette al minimo possibile.

Full range of tools with increased driving and tight tolerances to increase accuracy in cutting. All necessary measures are taken so that the clearance between the punch and the guide system are restricted to a minimum.

Compatibili Serie 90 staz. C / D / E – Series 90 C / D / E Station

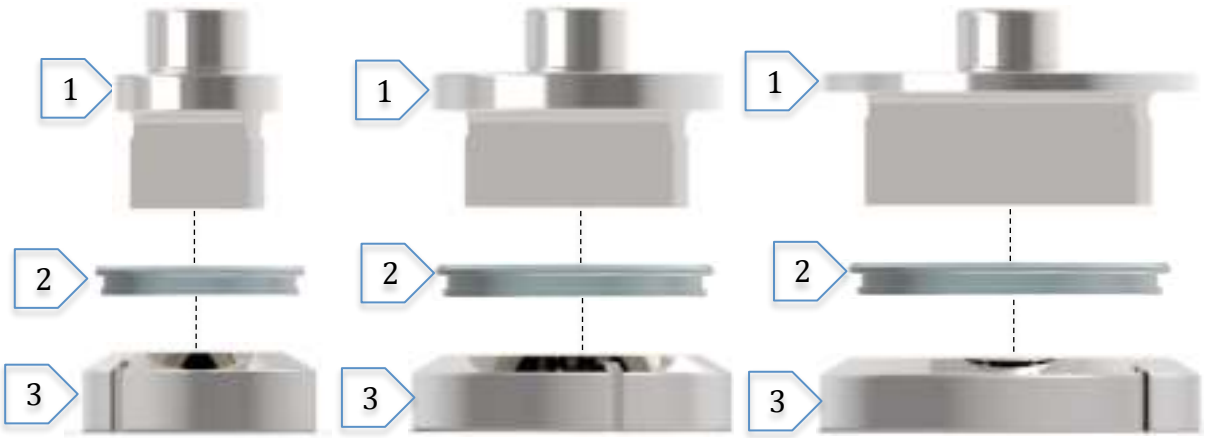

Per completamento codice vedi pag. 52 - To complete the code, see page 52

Pos.	Descr.		STAZ. C		STAZ. D		STAZ. E	
			Cod.	PRICE	Cod.	PRICE	Cod.	PRICE
1	Punzone - Punch Standard HSS	Ton.-Rou.	PMTCL2		PMTDL2		PMTEL2	
		Fig.-Sha.	PM_CL2		PM_DL2		PM_EL2	
2	Estrattore - Stripper	Ton.-Rou.	EMTCL4		EMTDL4		EMTEL4	
		Fig.-Sha.	EM_CL4		EM_DL4		EM_EL4	
3	Matrice - Die HWS	Ton.-Rou.	MATCL1		MATDL1		MATEL1	
		Fig.-Sha.	MA_CL1		MA_DL1		MA_EL1	
	Matrice - Die HSS	Ton.-Rou.	MATCL2		MATDL2		MATEL2	
		Fig.-Sha.	MA_CL2		MA_DL2		MA_EL2	

Estrattore C – D - E / C – D - E Stripper

Per completamento codice vedi pag. 52 - To complete the code, see page 52

Pos.	Descr.		STAZ. C		STAZ. D		STAZ. E	
			Cod.	PRICE	Cod.	PRICE	Cod.	PRICE
1	Estrattore - Stripper	Ton.-Rou.	EKTCL		EKTDL		EKTEL	
		Fig.-Sha.	EK_CL		EK_DL		EK_EL	